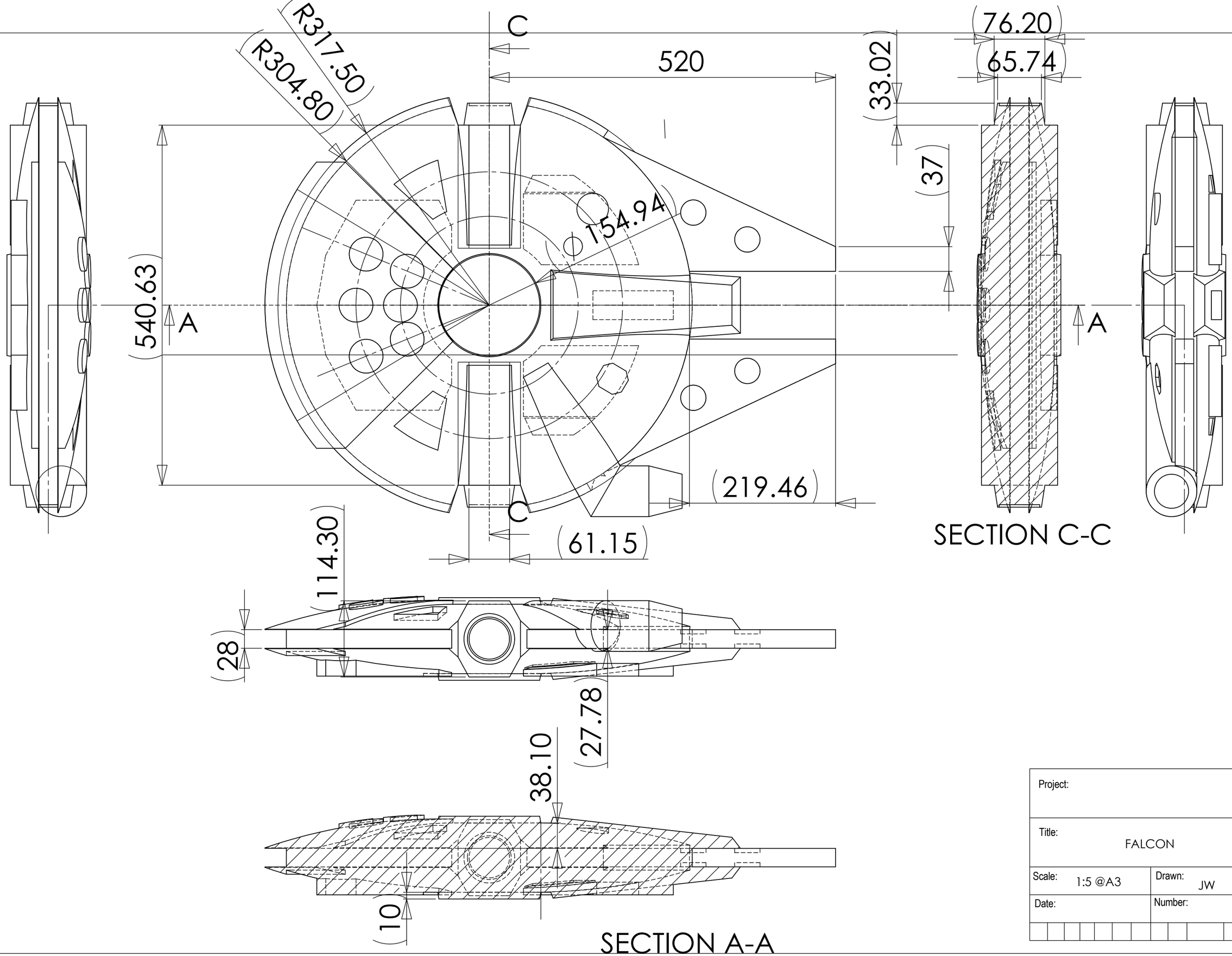

Project:	
Title: FALCON	
Scale: 1:5 @A3	Drawn: JW
Date:	Number:

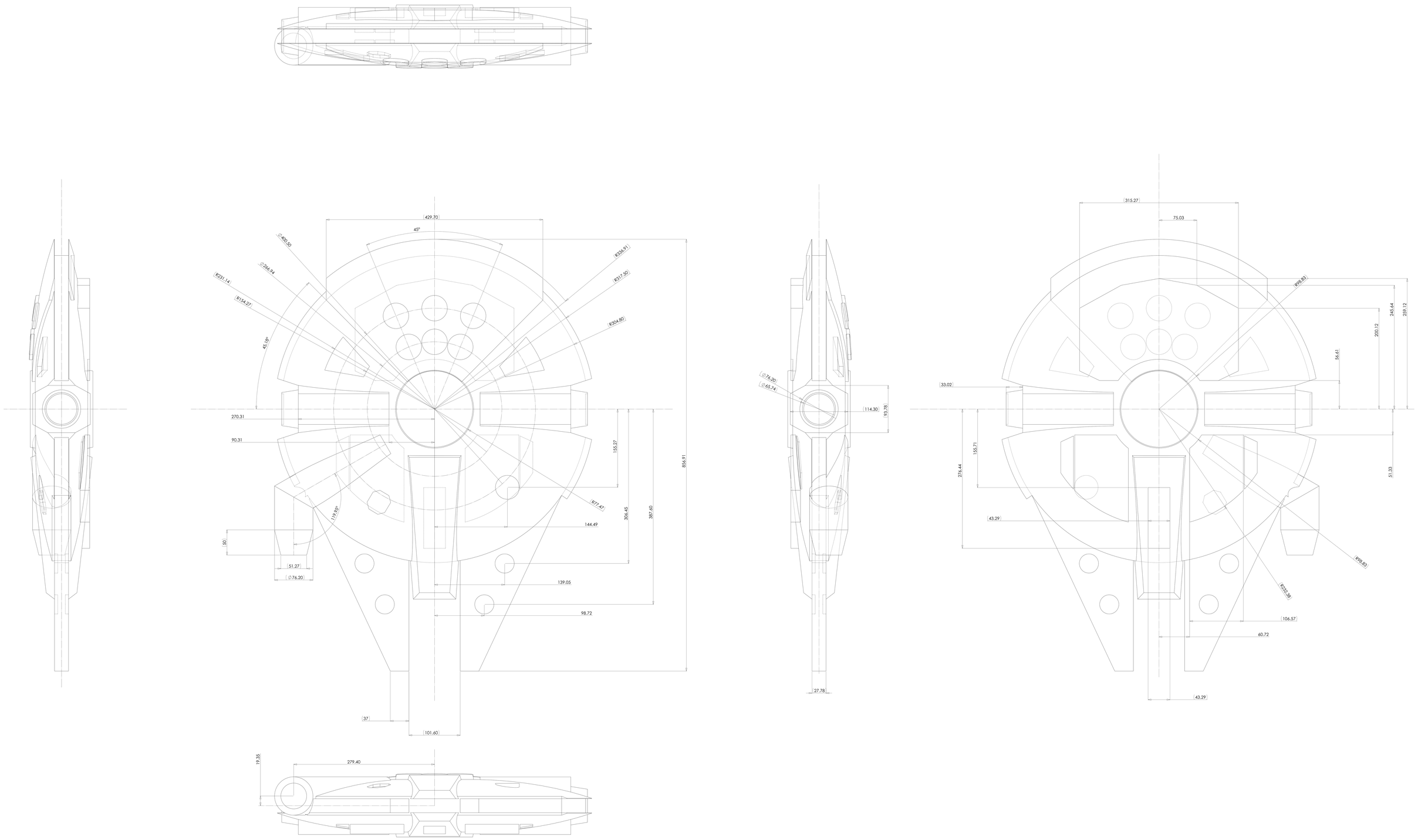
429.70
45°
⌀420.50
⌀266.94
R231.14
R154.27
45.18°
R336.91
R317.50
R304.80
270.31
90.31
155.27
856.91
R77.47
119.95°
306.45
387.60
144.49
50
51.27
⌀76.20
139.05
98.72
37
101.60
19.35
279.40
⌀76.20
⌀65.74
114.30
93.78
27.78
315.27
75.03
R98.83
245.64
209.12
200.12
56.61
33.02
276.44
155.71
51.33
43.29
R98.83
R231.38
106.57
60.72
43.29