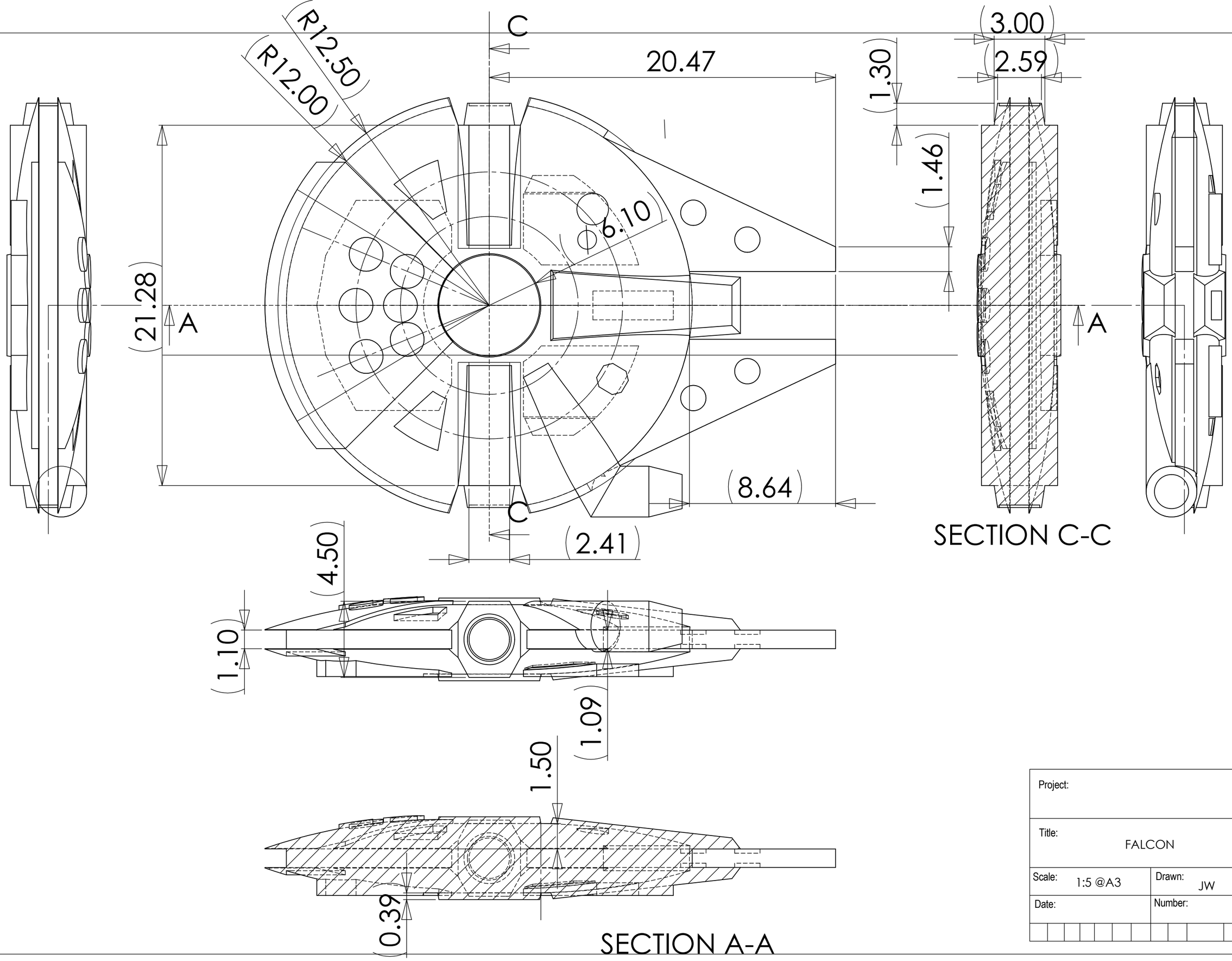

Project:	
Title: FALCON	
Scale: 1:5 @A3	Drawn: JW
Date:	Number:

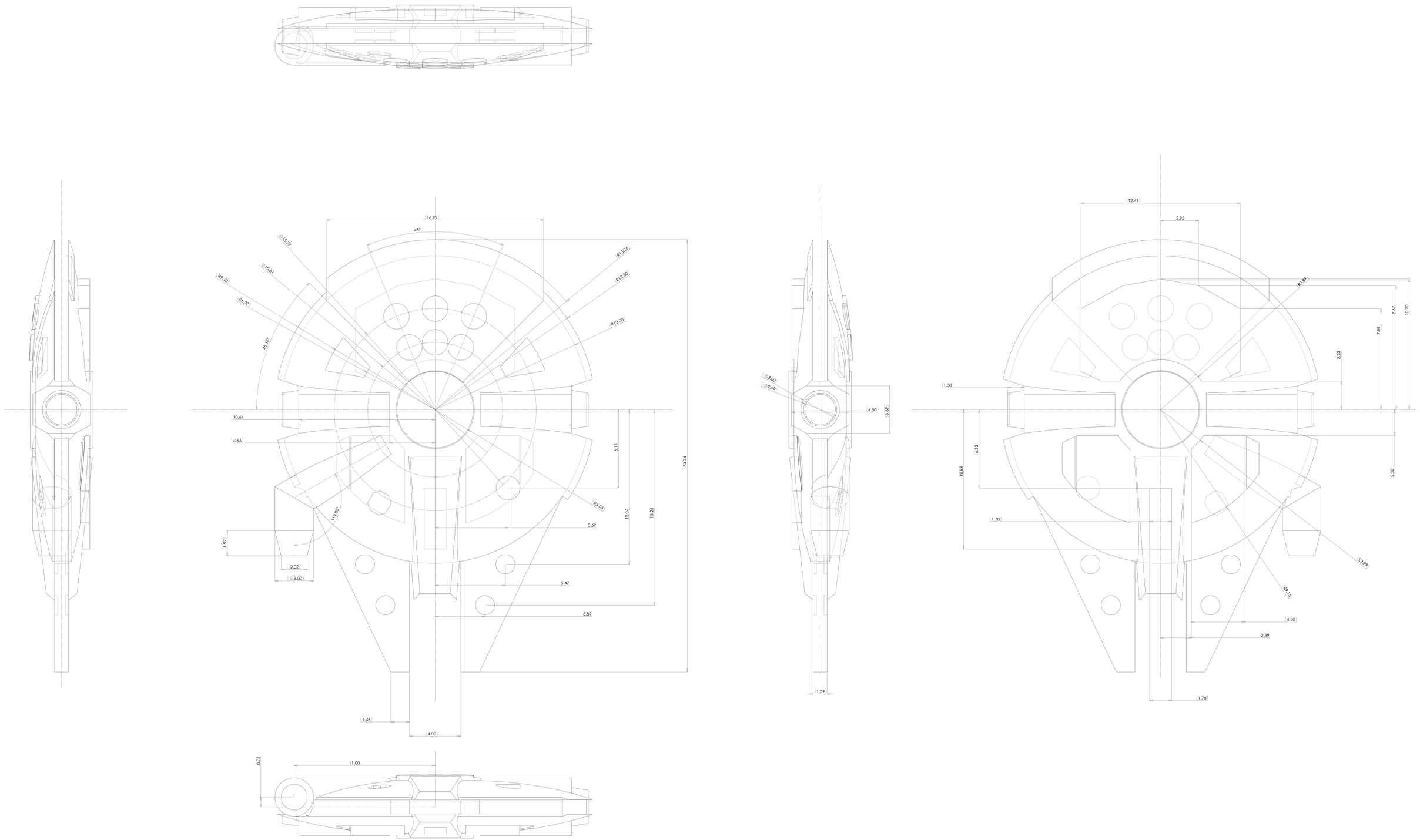
16.92
45°
⌀15.77
⌀10.51
R9.10
R6.07
45.18°
R13.26
R12.50
R12.00
10.64
3.56
6.11
33.74
R3.05
12.06
15.26
119.929°
5.69
1.97
2.02
⌀3.00
5.47
3.89
1.46
4.00
0.76
11.00
⌀3.00
⌀2.59
4.50
3.69
1.09
12.41
2.95
R2.89
9.67
10.20
7.88
2.23
1.30
6.13
10.88
2.02
1.70
R3.89
R9.15
4.20
2.39
1.70